Code article 86.D058.3333.03

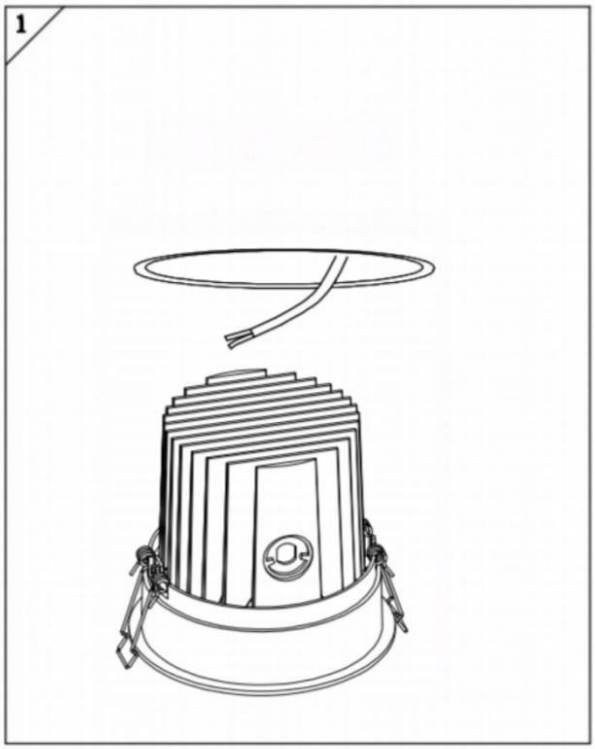

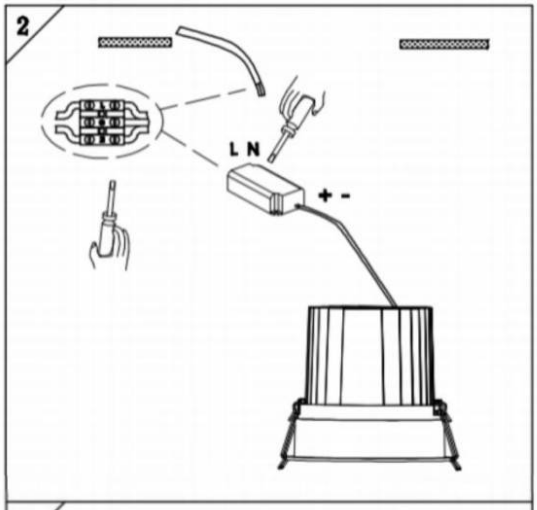

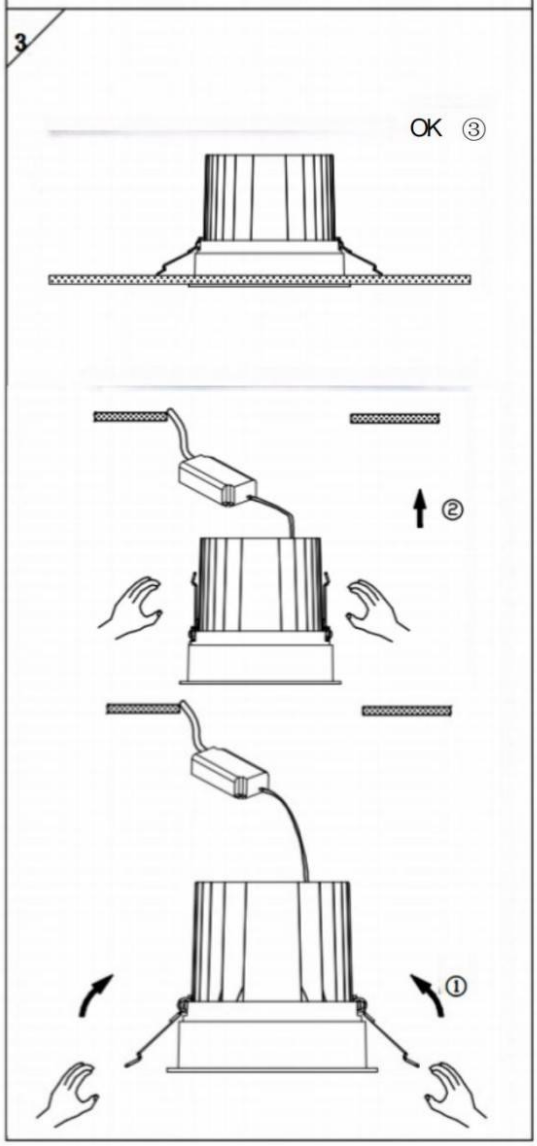

Cut out in the right size:

86.D058.1***.** 75mm
86.D058.2***.** 98mm
86.D058.3***.** 105mm
86.D058.4***.** 130mm